PREPARED BY : DATE T.Nishioka : Feb. 17. 2009	S H A R P	SPEC No. LCP-2209004
		FILE No.
		ISSUE : Feb. 17. 2009
CHECKED BY : DATE Y.Nishihara: Feb. 17. 2009	MOBILE LIQUID CRYSTAL DISPLAY GROUP SHARP CORPORATION	PAGE : 20 pages
	SPECIFICATION	APPLICABLE GROUP MOBILE LIQUID CRYSTAL DISPLAY GROUP

DEVICE SPECIFICATION FOR

CG-Silicon TFT-LCD module

MODEL No. **LS038Y7DX01**

☐ CUSTOMER'S APPROVAL

DATA _____

BY _____

PRESENTED

BY Katsuyoshi Himeshima

K. HIMESHIMA

GENERAL MANAGER
ENGINEERING DEPTMENT
MOBILE LIQUID CRYSTAL DISPLAY DIVISION II
MOBILE LIQUID CRYSTAL DISPLAY GROUP
SHARP CORPORATION

RECORDS OF REVISION

ＭＯＤＥＬ　Ｎｏ：ＬＳ０３８Ｙ７ＤＸ０１

ＳＰＥＣ　Ｎｏ　：ＬＣＰ－２２０９００４

DATE	REVISED	PAGE	SUMMARY	NOTE
Feb.17.2009	LCP-2209004	-	-	1st Issue

NOTICE

This publication is the proprietary of SHARP and is copyrighted, with all rights reserved. Under the copyright laws, no part of this publication may be reproduced or transmitted in any form or by any means, electronic or mechanical for any purpose, in whole or in part, without the express written permission of SHARP. Express written permission is also required before any use of this publication may be made by a third party.

The application circuit examples in this publication are provided to explain the representative applications of SHARP's devices and are not intended to guarantee any circuit design or permit any industrial property right or other rights to be executed. SHARP takes no responsibility for any problems related to any industrial property right or a third party resulting from the use of SHARP's devices, except for those resulting directly from device manufacturing processes.

In the absence of confirmation by device specification sheets, SHARP takes no responsibility for any defects that occur in equipment using any of SHARP's devices, shown in catalogs, data books, etc. Contact SHARP in order to obtain the latest device specification sheets before using any SHARP's device.

SHARP reserves the right to make changes in the specifications, characteristics, data, materials, structures and other contents described herein at any time without notice in order to improve design or reliability. Contact SHARP in order to obtain the latest specification sheets before using any SHARP's device. Manufacturing locations are also subject to change without notice.

Observe the following points when using any device in this publication. SHARP takes no responsibility for damage caused by improper use of the devices.

The devices in this publication are designed for use in general electronic equipment designs, such as:

·Personal computers ·Office automation ·Telecommunication equipment
·Test and measurement equipment ·Industrial control ·Personal digital assistant
·Audio visual and multimedia equipment ·Consumer electronics ·Personal navigation device

The appropriate design measures should be taken to ensure reliability and safety when SHARP's devices are used for equipment such as:

·Transportation control and safety equipment (i.e., aircraft, trains, automobiles, etc.)
·Traffic signals ·Gas leakage sensor breakers
·Alarm equipment ·Various safety devices etc.

SHARP's devices shall not be used for equipment that requires extremely high level of reliability, such as:

·Military and space applications ·Nuclear power control equipment
·Medical equipment for life support

Contact a SHARP representative, in advance, when intending to use SHARP's devices for any "specific" applications other than those recommended by SHARP.

Contact and consult with a SHARP representative if there are any questions about the contents of this publication.

1. Applicable Scope

This specification is applicable to TFT-LCD Module “LS038Y7DX01”.

2. General Description

This module is a color transflective and active matrix LCD module incorporating CG-Silicon TFT (Continuous Grain-Silicon Thin Film Transistor). It is composed of a color TFT-LCD panel, driver ICs, Input FPC and a back light unit. Graphics and texts can be displayed on a 480×3×800 dots panel with 262,144 colors by supplying 18bit data signals(6bit×RGB), four timing signals, 3wire SPI Interface signals, logic(typ.+1.8V), analog (typ. +2.85V) supply voltages for TFT-LCD panel driving, supply voltage for back light and back light control signals.

It is a wide viewing-angle-mode (Vertical viewing angle :(±80°), Horizontal viewing angle :(±80°), CR>10).

3. Mechanical (Physical) Specifications

Table1

Item	Specifications	Unit	Remarks
Screen size	9.66 (3.8” type) Diagonal	cm	
Active area	49.68(H)×82.8(V)	mm	
Pixel format	480(H)×800(V)	pixel	
	1 Pixel =R+G+B dots	-	
Pixel pitch	0.0345(H)×0.1035(V)	mm	
Pixel configuration	R,G,B vertical stripes	-	
Display mode	Normally black	-	
Unit outline dimensions	54.6(W)×93.0(H)×2.0(D)	mm	【Note3-1】
Mass	20	g	

【Note3-1】The above-mentioned table indicates module sizes without some projections and FPC.
For detailed measurements and tolerances, please refer to Fig.1 Outline Dimensions.

4. Pixel Configuration

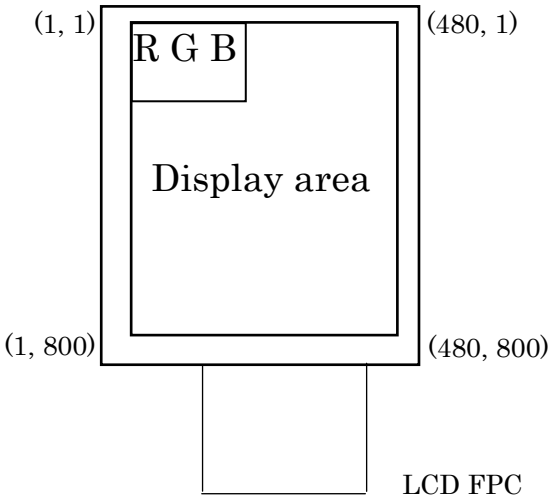

5. Input Terminal Names and Functions

Table2

Pin No.	Symbol	I/O	Description	Remarks
1	LED-	-	Power Supply for LED(Cathode)	
2	LED+	-	Power Supply for LED(Anode)	
3	NC	-	OPEN(Not Connected)	
4	VDC	-	Power Supply(Analog)	
5	GND	-	Ground	
6	VDDIO	-	Power Supply(Digital)	
7	GND	-	Ground	
8	BRESET	I	Reset Signal	
9	LCDCS	I	Serial Interface(Chip Select)	
10	SO	O	Serial Interface(Data output)	
11	SI	I	Serial Interface(Data Input)	
12	SCLK	I	Serial Interface(Clock)	
13	GND	-	Ground	
14	R0(ID0)	I(O)	Red Data Signal(LSB) 、(ID pin(10kΩ Pull-Up VDDIO))	
15	R1	I	Red Data Signal	
16	R2	I	Red Data Signal	
17	R3	I	Red Data Signal	
18	R4	I	Red Data Signal	
19	R5	I	Red Data Signal(MSB)	
20	GND	-	Ground	
21	G0	I	Green Data Signal(LSB)	
22	G1	I	Green Data Signal	
23	G2	I	Green Data Signal	
24	G3	I	Green Data Signal	
25	G4	I	Green Data Signal	
26	G5	I	Green Data Signal(MSB)	
27	GND	-	Ground	
28	NC	-	OPEN(Not Connected)	
29	GND	-	Ground	
30	DOTCLK	I	Dot Clock	
31	GND	-	Ground	
32	HSYNC	I	Horizontal Synchronizing Signal	
33	VSYNC	I	Vertical Synchronizing Signal	
34	GND	-	Ground	
35	B0(ID1)	I(O)	Blue Data Signal(LSB)、(ID pin(10kΩ Pull-Down GND))	
36	B1	I	Blue Data Signal	
37	B2	I	Blue Data Signal	
38	B3	I	Blue Data Signal	
39	B4	I	Blue Data Signal	
40	B5	I	Blue Data Signal(MSB)	
41	GND	-	Ground	
42	PWM	O	PWM output for backlight adjustment	
43	X-	-	Touch panel electrode(X-)	
44	Y-	-	Touch panel electrode(Y-)	
45	X+	-	Touch panel electrode(X+)	
46	Y+	-	Touch panel electrode(Y+)	
47	Key_1	-		
48	Key_2	-		
49	Key_3	-		
50	Key_C	-		

6. Absolute Maximum Ratings

Table 3 GND=0V

Parameter	Symbol	Conditions	Rated value	Unit	Remarks
Digital Power Supply Voltage	VDC	Ta=+25℃	-0.3 ~ +4.0	V	【Note6-1】
Analog Power Supply Voltage	VDDIO	Ta=+25℃	-0.3 ~ +4.0	V	【Note6-1】
Digital Input Voltage	V_{IN}	Ta=+25°C	-0.3 ~ VDDIO+0.3	V	【Note6-1, 6-2】
Temperature for storage	T_{stg}	-	-30 ~ +70	°C	【Note6-3】
Temperature for operation	T_{opr}	-	-20 ~ +60	°C	【Note6-3】
LED Input electric current	I_{LED}	Ta=+25°C	35	mA	【Note6-4】

【Note6-1】Voltage applied to GND pins. GND pin conditions are based on all the same voltage(0V). Always connect all GND externally and use at the same voltage.

【Note6-2】BRESET,LCDCS,SI,SCLK,ENAB,DOTCLK,HSYNC,VSYNC,R0~R5, G0~G5,B0~B5 terminals are applied.

【Note6-3】Humidity : 95%RHMax.(at Ta≤40°C). Maximum wet-bulb temperature is less than 39°C(at Ta>40°C). Condensation of dew must be avoided.

【Note6-4】Ambient temperature and the maximum input are fulfilling the following operating conditions.

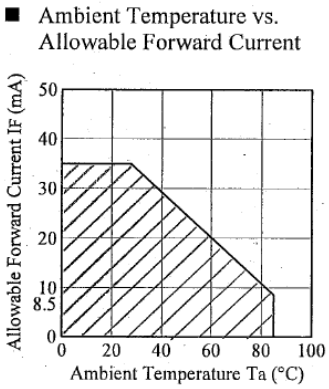

7. Electrical Characteristics

7-1. TFT-LCD Panel Driving Section

Table 4 GND=0V

Parameter	Symbol	Min.	Typ.	Max.	Unit	Remarks
Analog Power Supply Voltage	VDC	+2.7	+2.85	+3.3	V	【Note7-1】
Digital Power Supply Voltage	VDDIO	+1.65	+1.8	VDC	V	【Note7-1】
Input voltage (Low)	V_{IL}	0	-	0.2VDDIO	V	【Note7-2, 7-3】
Input voltage (High)	V_{IH}	0.8VDDIO	-	VDDIO	V	【Note7-2, 7-4】
Input current	I_O	-10	-	10	mA	

【Note7-1】Include Ripple Noise

【Note7-2】BRESET,LCDCS,SI,SCLK,ENAB,DOTCLK,HSYNC,VSYNC,R0~R5, G0~G5,B0~B5 terminals are applied.

【Note7-3】without overshoot

【Note7-4】applied overshoot

7-2. Back Light Driving Section

Table 5 Ta=+25°C, GND=0V

Parameter	Symbol	Min.	Typ.	Max.	Unit	Remarks
LED Voltage	V_{LED}	-	+22.4	+24.5	V	【Note7-5】
LED Current	I_{LED}	-	20	-	mA	
Power Consumption	W_{LED}	-	448	-	mW	【Note7-6】

【Note7-5】at I_{LED}=20mA

【Note7-6】$W_{LED}=V_L \times I_L$

7-3. Power Consumption

Table 6 Ta=+25°C, GND=0V

Parameter	Symbol	Conditions	Min.	Typ.	Max.	Unit	Remarks
Current Consumption	Ivdc	VDC=2.85V	-	31	46.5	mA	【Note7-7】
	Ivddio	VDDIO=1.8V	-	4.8	7.2	mA	【Note7-8】

【Note7-7】Measurement Conditions : White(GS63) pattern

【Note7-8】Measurement Conditions : Gray(GS21)-Gray(GS42) Dot Pattern

8. Timing characteristics of input signals

8-1 AC Timing

Table 7

Parameter	Symbol	Min.	Typ.	Max.	Unit	Remark
Vertical frequency	f_V	-	59.64	-	Hz	
Horizontal frequency	f_H	-	48.08	-	kHz	
DOTCLK frequency	f_{DOTCLK}	-	25	40	MHz	
DOTCLK cycle	t_{DOTCLK}	25	40	-	ns	
Hsync low pulse width	t_{HSW}	2	10	-	DOTCLK	
Horizontal back porch	t_{HBP}	2	20	-	DOTCLK	
Horizontal front porch	t_{HFP}	8	10	-	DOTCLK	
Horizontal data start point	t_{HSW}+ t_{HBP}	12	30	-	DOTCLK	
Horizontal blanking period	t_{HSW} + t_{HBP} + t_{HFP}	20	40	-	DOTCLK	
Horizontal display area	HDISP	-	480	-	DOTCLK	
Horizontal cycle	H_{cycle}	500	520	1023	DOTCLK	
Vsync low pulse width	t_{VSW}	1	2	-	Line	
Vertical back porch	t_{VBP}	2	2	-	Line	
Vertical front porch	t_{VFP}	1	2	-	Line	
Vertical data start point	t_{VSW}+ t_{VBP}	2	4	-	Line	
Vertical blanking period	t_{VSW} + t_{VBP} + t_{VFP}	3	6	-	Line	
Vertical display area	VDISP	-	800	1023	Line	
Vertical cycle	V_{cycle}	-	806	-	Line	
Vertical synchronization setup time	t_{vsys}	7.5	-	-	ns	
Vertical synchronization hold time	t_{vsyh}	7.5	-	-	ns	
Horizontal synchronization setup time	t_{hsys}	7.5	-	-	ns	
Horizontal synchronization hold time	t_{hsyh}	7.5	-	-	ns	
Sync signal falling phase difference	t_{hv}	-	-	480	DOTCLK	
Clock low period	t_{CKL}	12.5	-	-	ns	
Clock high period	t_{CKH}	12.5	-	-	ns	
Data setup time	t_{ds}	7.5	-	-	ns	
Data hold time	t_{dh}	7.5	-	-	ns	

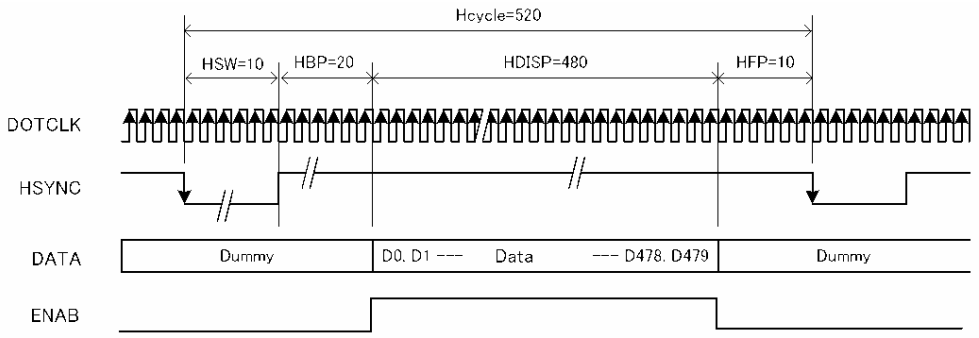

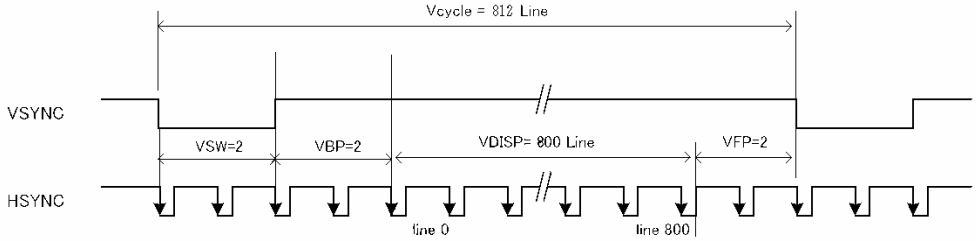

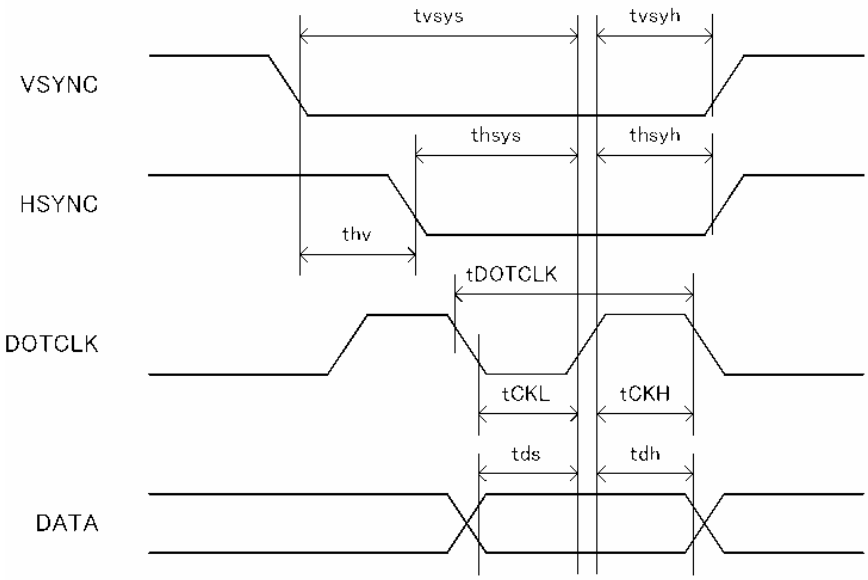

8-2 Reset Input Timing

Table 8

Parameter	Symbol	Min.	Typ.	Max.	Unit	Remark
Low pulse width	t_{RES}	30			us	
Non-reactive low pulse width	t_{REIS}			5	us	
Release time	t_{REL}	1			ms	

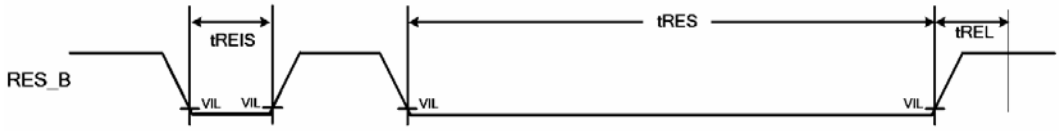

8-3 Serial Interface Input Timing and Sequence(Address/Data Transfer Mode)

(1) Serial Interface Input Timing

Table 9

Parameter	Symbol	Min.	Typ.	Max.	Unit	Remark
SCLK cycle	t_{scyc}	210	-	-	ns	
SCLK rise/fall time	t_R , t_F	-	-	25	ns	
High pulse width	t_{SCHW} / t_{SCHR}	90	-	-	ns	
Low pulse width	t_{SCLW} / t_{SCLR}	90	-	-	ns	
LCDCS setup time	t_{CSS}	120	-	-	ns	
LCDCS hold time	t_{CSH}	120	-	-	ns	
Serial input data setup time	t_{SIDS}	90	-	-	ns	
Serial input data hold time	t_{SIDH}	90	-	-	ns	
Serial output data delay time	t_{SODD}	-	-	100	ns	
Serial output data hold time	t_{SODH}	100	-	-	ns	

*All timings are 20 – 80%(VDDIO).

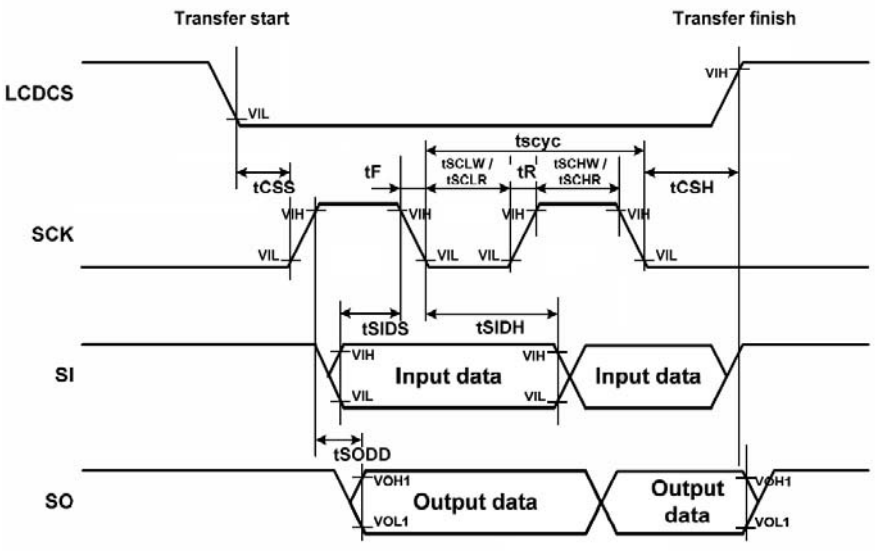

(2) Serial Interface Sequence

(a) Basic Sequence(Write Sequence)

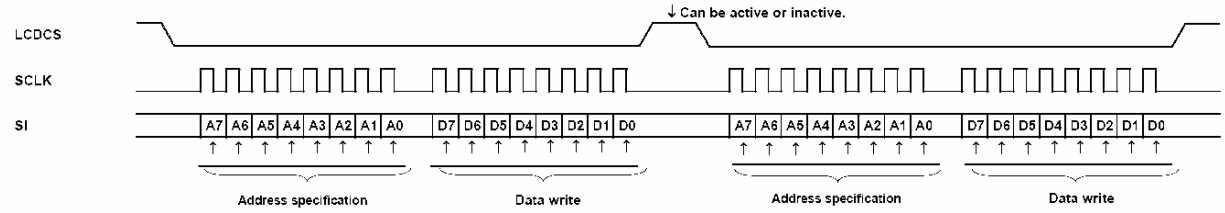

(b) Continuous Write Sequence

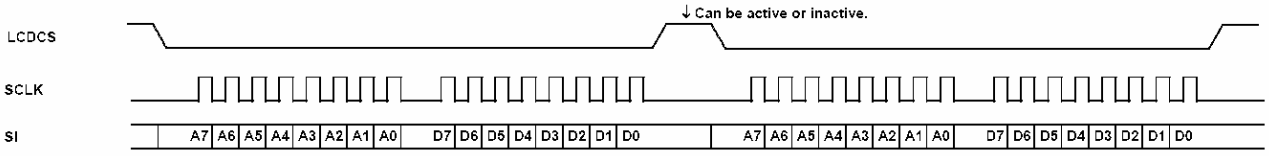

(c) Continuous read Sequence

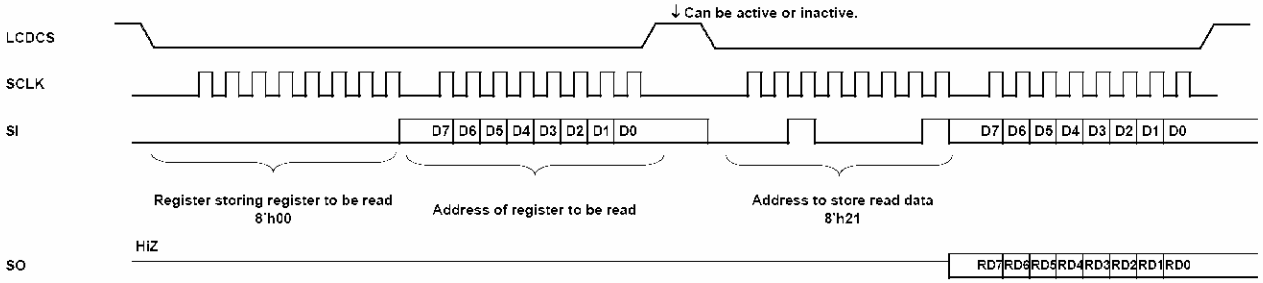

9. Power Sequence

9-1 Power On Sequence(Power application)

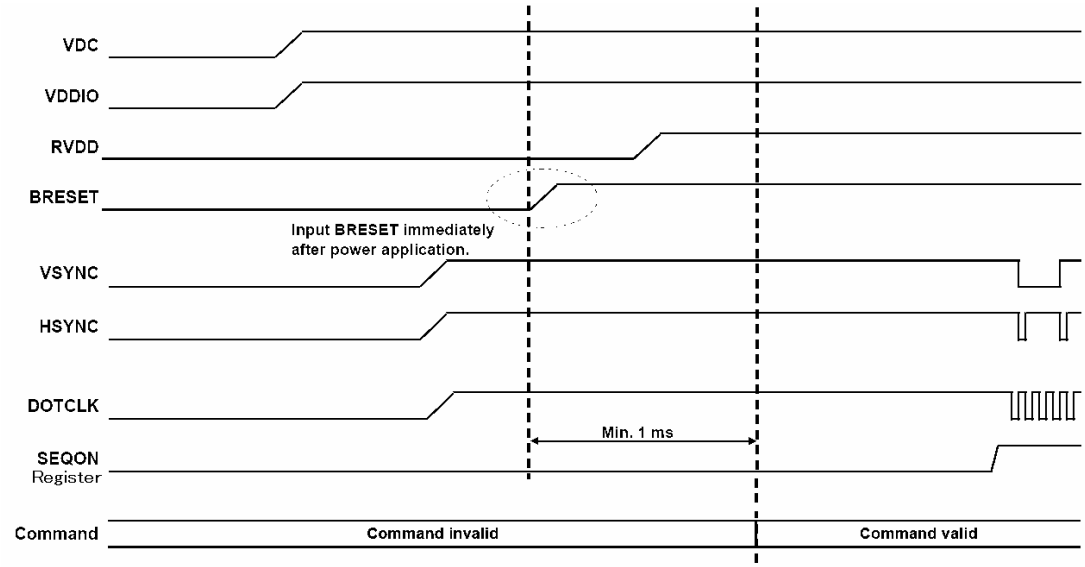

9-2 Power On Sequence(After power application)

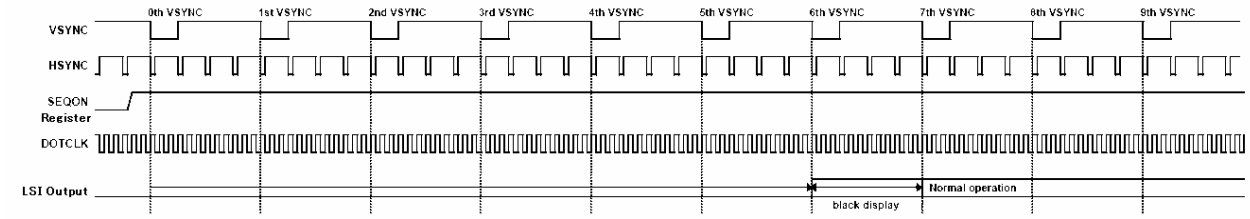

9-3 Power Off Sequence

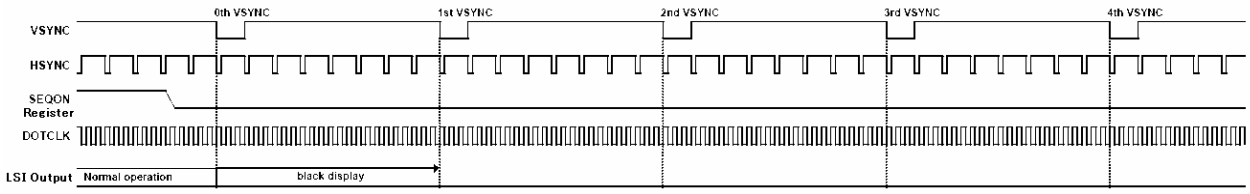

9-4 Register Setting

Address	value	Comment	
VDDIO	OFF->ON	Power On	1.8V
VDC	OFF->ON	Power On	2.85V
Wait	電源電圧確定まで		
BRESET	L	RESET Release	
Wait	30us	MIN	
BRESET	H		
Wait	1ms	MIN	
DOTCLK, VSYNC, HSYNC	OFF->ON	信号オン	

Addr	value	Comment	
R15	01h	ｺﾏﾝﾄﾞﾘｾｯﾄ	
R5	01h		
R7	10h		
R9	1Eh		
R10	04h		
R17	FFh		
R21	8Ah		
R22	00h		
R23	82h		
R24	24h		
R25	22h		
R26	6Dh		
R27	EBh		
R28	B9h		
R29	3Ah		
R49	1Ah		
R50	16h		
R51	05h		
R55	7Fh		
R56	15h		
R57	7Bh		
R60	05h		
R61	0Ch		
R62	80h		
R63	00h		
R92	90h		
R97	01h		
R98	FFh	VCOMH	
R113	11h		
R114	02h	GVDD	
R115	08h		
R123	ABh		
R124	04h		
R6	02h		
R133	00h		
R134	FEh		
R135	22h		
R136	0Bh		
R137	FFh		
R138	0Fh		
R139	00h		
R140	FEh		
R141	22h		
R142	0Bh		
R143	FFh		
R144	0Fh		
R145	00h		
R146	FEh		
R147	22h		
R148	0Bh		
R149	FFh		
R150	0Fh		
R202	30h	VDC2S Limit6V	
R30	01h	Manual Mode	
R4	01h	SEQON	
R31	41h		
Wait	10mS	MIN	
R31	C1h		
Wait	10mS	MIN	
R31	D9h		
R31	DFh		

5VSYNC以内

→ 5VSYNC直前

Display On

R4	00h	ｵﾌｼｰｹﾝｽ実行	SEQON
Wait	1VSYNC以上 2VSYNC以内		
R31	C1h		
Wait			
R31	00h	ALL OFF	
Wait	4Vsync		
Wait	1flame		
DOTCLK, VSYNC, HSYNC	ON->OFF	信号ｵﾌ	
VDC	ON->OFF	Power Off	
VDDIO	ON->OFF	Power Off	

4VSYNC以上

Display Off

10. Input Signals, Basic Display Colors and Gray Scale of Each Color

Table 12

	Colors & Gray Scale	Gray Scale	Data signals																	
			R0	R1	R2	R3	R4	R5	G0	G1	G2	G3	G4	G5	B0	B1	B2	B3	B4	B5
			LSB					MSB	LSB					MSB	LSB					MSB
Basic Color	Black	–	0	0	0	0	0	0	0	0	0	0	0	0	0	0	0	0	0	0
	Blue	–	0	0	0	0	0	0	0	0	0	0	0	0	1	1	1	1	1	1
	Green	–	0	0	0	0	0	0	1	1	1	1	1	1	0	0	0	0	0	0
	Cyan	–	0	0	0	0	0	0	1	1	1	1	1	1	1	1	1	1	1	1
	Red	–	1	1	1	1	1	1	0	0	0	0	0	0	0	0	0	0	0	0
	Magent	–	1	1	1	1	1	1	0	0	0	0	0	0	1	1	1	1	1	1
	Yellow	–	1	1	1	1	1	1	1	1	1	1	1	1	0	0	0	0	0	0
	White	–	1	1	1	1	1	1	1	1	1	1	1	1	1	1	1	1	1	1
Gray Scale of Red	Black	GS0	0	0	0	0	0	0	0	0	0	0	0	0	0	0	0	0	0	0
	⇧	GS1	1	0	0	0	0	0	0	0	0	0	0	0	0	0	0	0	0	0
	Darker	GS2	0	1	0	0	0	0	0	0	0	0	0	0	0	0	0	0	0	0
	⇧	↓				↓						↓						↓		
	⇩	↓				↓						↓						↓		
	Brighter	GS61	1	0	1	1	1	1	0	0	0	0	0	0	0	0	0	0	0	0
	⇩	GS62	0	1	1	1	1	1	0	0	0	0	0	0	0	0	0	0	0	0
	Red	GS63	1	1	1	1	1	1	0	0	0	0	0	0	0	0	0	0	0	0
Gray Scale of Green	Black	GS0	0	0	0	0	0	0	0	0	0	0	0	0	0	0	0	0	0	0
	⇧	GS1	0	0	0	0	0	0	1	0	0	0	0	0	0	0	0	0	0	0
	Darker	GS2	0	0	0	0	0	0	0	1	0	0	0	0	0	0	0	0	0	0
	⇧	↓				↓						↓						↓		
	⇩	↓				↓						↓						↓		
	Brighter	GS61	0	0	0	0	0	0	1	0	1	1	1	1	0	0	0	0	0	0
	⇩	GS62	0	0	0	0	0	0	0	1	1	1	1	1	0	0	0	0	0	0
	Green	GS63	0	0	0	0	0	0	1	1	1	1	1	1	0	0	0	0	0	0
Gray Scale of Blue	Black	GS0	0	0	0	0	0	0	0	0	0	0	0	0	0	0	0	0	0	0
	⇧	GS1	0	0	0	0	0	0	0	0	0	0	0	0	1	0	0	0	0	0
	Darker	GS2	0	0	0	0	0	0	0	0	0	0	0	0	0	1	0	0	0	0
	⇧	↓				↓						↓						↓		
	⇩	↓				↓						↓						↓		
	Brighter	GS61	0	0	0	0	0	0	0	0	0	0	0	0	1	0	1	1	1	1
	⇩	GS62	0	0	0	0	0	0	0	0	0	0	0	0	0	1	1	1	1	1
	Blue	GS63	0	0	0	0	0	0	0	0	0	0	0	0	1	1	1	1	1	1

0: Low level voltage, 1: High level voltage

Each basic color can be displayed in 64 gray scales from 6 bit data signals. According to the combination of total 18 bit data signals, the 262,144-color display can be achieved on the screen.

11. Optical Characteristics

11-1 Not Driving the Back Light Condition

Table 13 Ta=+25°C

Parameter		Symbol	Condition	Min.	Typ.	Max.	Unit	Remark
Viewing angle range		θ21, θ22	CR>2	40	50	-	degree	【Note11-1, 11-2】
		θ11, θ12		40	50	-	degree	
Contrast ratio		CR	θ=0°	6	12	-	-	【Note11-2】
Response Time	Rise	τr	θ=0°	-	40	60	ms	【Note11-3】
	Fall	τd		-	40	60	ms	
White Chromaticity		x	θ=0°	0.298	0.318	0.338	-	【Note11-4】
		y		0.310	0.330	0.350	-	
Reflection Ratio		R	θ=0°	0.97	1.5	-	%	【Note11-5】

*The measuring method of the optical characteristics is shown by the following figure.

*A measurement device is DMS diffuse measurement system.

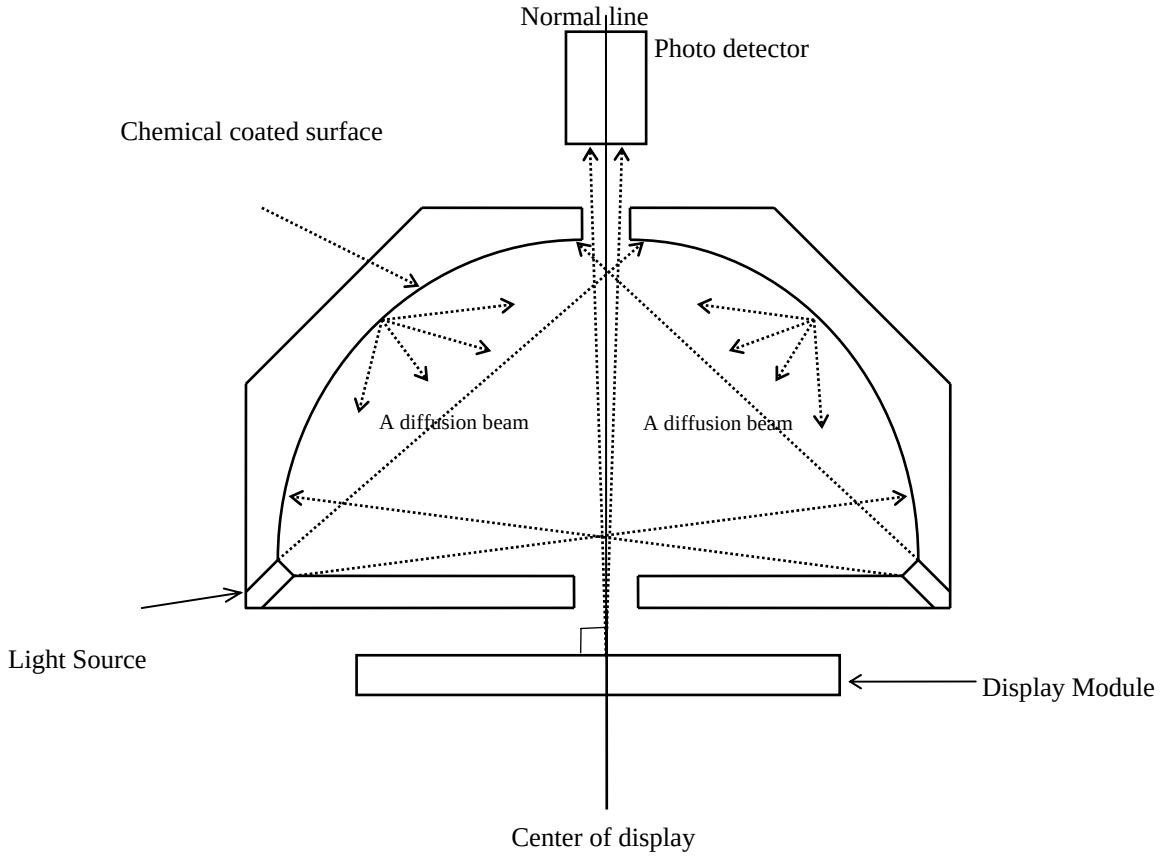

Measuring method for optical characteristics

11-2 Driving the Back Light Condition

Table 14 Ta=+25°C

Parameter		Symbol	Condition	Min.	Typ.	Max.	Unit	Remark
Viewing Angle Range		θ21, θ22	CR>10	70	80	-	degree	【Note11-1, 11-2】
		θ11, θ12		70	80	-	degree	
Contrast Ratio		CR	θ=0°	350	500	-	-	【Note11-2】
Response Time	Rise	Tr	θ=0°	-	40	60	ms	【Note11-3】
	Decay	Td		-	40	60	ms	
White Chromaticity		x	θ=0°	0.275	0.310	0.345	-	
		y		0.295	0.330	0.365	-	
Brightness		X_{L1}	θ=0°	240	300	-	cd/m²	I_{LED}=20mA
NTSC Ratio		S		60	70	-	%	

*The measuring method of the optical characteristics is shown by the following figure.

*A measurement device is TOPCON luminance meter SR-3.(Viewing cone1.)

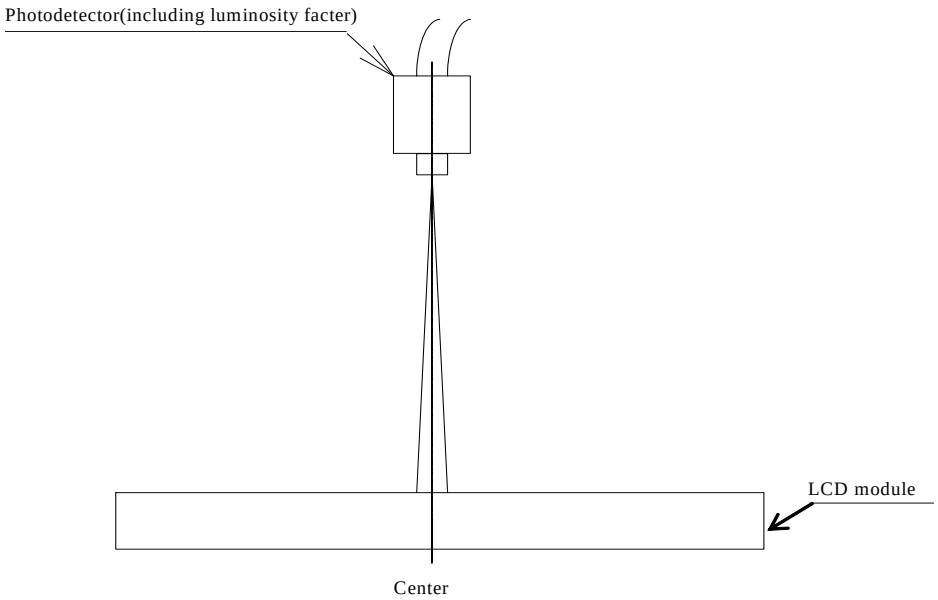

Measuring method for optical characteristics

【Note 11-1】Viewing angle range is defined as follows.

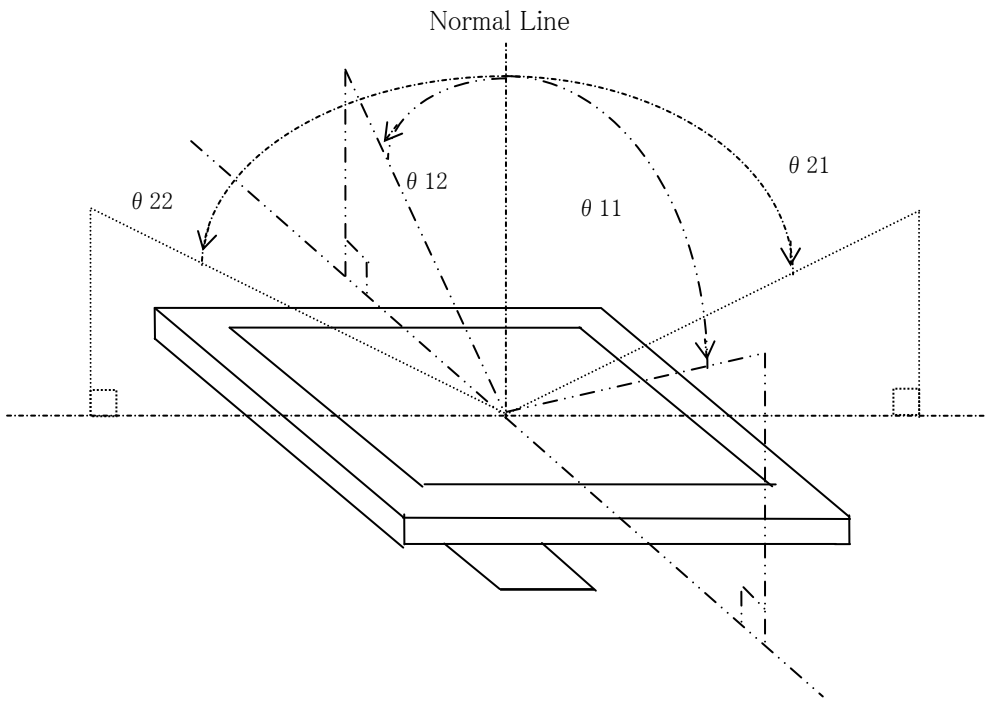

【Note 11-2】Definition of contrast ratio:

The contrast ratio is defined as the follows:

$$\text{Contrast ratio (CR)} = \frac{\text{Luminance (brightness) with all pixels white}}{\text{Luminance (brightness) with all pixels black}}$$

【Note 11-3】Definition of response time:

The response time is defined as the following figure and shall be measured by switching the input signal for “black” and “white”

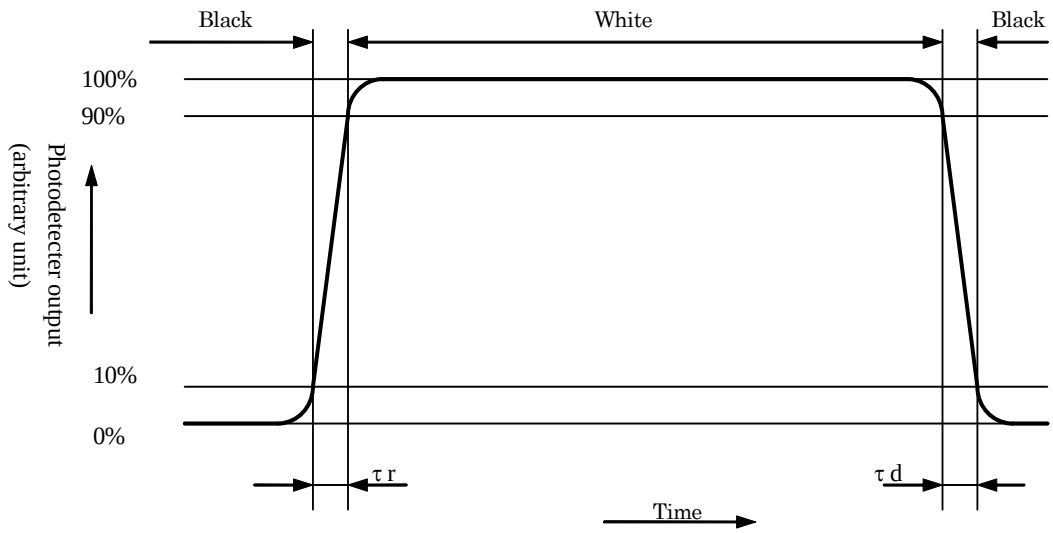

【Note 11-4】A measurement device is Minolta CM-2002.

【Note 11-5】Definition of reflection ratio

$$\text{Re}\ \textit{frection}\ \text{ratio} = \frac{\text{Light detected level of the reflection by the LCD module}}{\text{Light detected level of the reflection by the standard white boad}}$$

12. Display quality

The display quality of the color TFT-LCD module shall be in compliance with the Incoming Inspection Standards TFT-LCD.

13. Mechanical characteristics

13-1. External appearance

See Fig.1 Outline Dimension

13-2. FPC characteristics

Specific connector

NAIS AXT450124

14. Handling Precautions

14-1. Insertion and taking out of Connector

Be sure insert and take out of the connector (header) into the connector (socket) of the set after turning off the power supply on the set side.

14-2. Handling of FPC

The FPC for LCD panel shall be bent only slit portion. The bending slit shall be bent uniformly on the whole slit portion with bending radius larger than R 1.0mm.

14-3. Installation of the module

On mounting the module, be sure to fix the module on the same plane. Taking care not to warp or twist the module.

14-4. Precaution when mounting

(1) If water droplets and oil attaches to it for a long time, discoloration and staining occurs. Wipe then off immediately.

(2) Glass is used for the TFT-LCD panel. IF it is dropped or bumped against a hard object, it may be broken. Handle it with sufficient care.

(3) As the CMOS IC is used in this module, pay attention to static electricity when handling it. Take a measure for grounding on the human body.

14-5. Other

(1) The liquid-crystal is deteriorated by ultraviolet rays. Do not leave it in direct sunlight and strong ultraviolet rays for many hours.

(2) If it is kept at a temperature below the rated storage temperature, it becomes coagulated and the panel may be broken. Also, if it is kept at a temperature above the rated storage temperature, it becomes isotropic liquid and does not return to its original state. Therefore, it is desirable to keep it at room temperature as much as possible.

(3) If the LCD breaks, don’t put internal liquid crystal into the mouth. When the liquid crystal sticks to the hands, feet and clothes, wash it out immediately.

(4) Wipe off water drop or finger grease immediately. Long contact with water may cause discoloration or spots.

(5) Observe general precautions for all electronic components.

(6) Static image should not be displayed more than 5 minutes in order to prevent from occurrence of residual image.

(7) Epoxy resin (amine series curing agent), silicone adhesive material (dealcoholization series and oxime series), tray forming agent (azo compound) etc, in the cabinet or the packing materials may induce abnormal display with polarizer film deterioration regardress of contact or noncontact to polarizer film.
Be sure to confirm the component of them.

15. Reliability Test Items

Table 15

No.	Test item	Conditions
1	High temperature storage test	Ta = +70°C, 240h
2	Low temperature storage test	Ta = -30°C, 240h
3	High temperature and high humidity operation test	Ta = +40°C95%RH, 240h (No condensation)
4	High temperature operation test	Ta = +60°C, 240h
5	Low temperature operation test	Ta = -20°C, 240h
6	Electro static discharge test	±200V, 200pF(0Ω) to Terminals(Contact) (1 time for each terminals)
7	Shock test	980 m/s^2, 6 ms ±X,±Y,±Z 3 times for each direction (JIS C0041, A-7 Condition C)
8	Vibration test	Frequency range: 10Hz～55～10Hz Stroke: 1.5 mm Sweep: 10Hz～55Hz X,Y,Z 2 hours for each direction (total 6 hours) (JIS C0040,A－10 Condition A)
9	Heat shock test	Ta=-30℃～+70℃ / 5 cycles (1h) (1h)

*Ta = Ambient temperature

*Check items

In the standard condition, there shall be no practical problems that may affect the display function.

16. Others

16-1. Indication of lot number

The lot number is shown on a label. Attached location is shown in Fig.1 (Outline Dimensions).

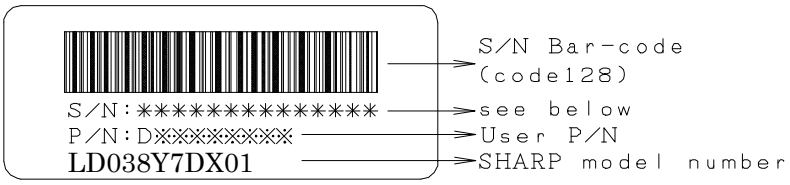

S/N:VPPRRYMDZZZZZZ
V :D(Vendor code)
PP:Part number code
RR:Revision Code
Y :Manufacture year
M :Manufacture month
D :Manufacture day
Z :Serial number(6 digits)

16-2. Used Regulation of Chemical Substances Breaking Ozone Stratum

Substances with the object of regulating : CFCS, Carbon tetrachloride, Halon
1,1,1-Trichloro ethane(Methyl chloroform)

(a) This LCD module, Constructed part and Parts don't contain the above substances.

(b) This LCD module, Constructed part and Parts don't contain the above substances in processes of manufacture.

16-3. If some problems arise about mentioned items in this document and other items, the user of the TFT-LCD module and Sharp will cooperate and make efforts to solve the problems with mutual respect and good will.

17. Forwarding form

(a) Piling number of cartons : 8 deep

(b) Package quality in one cartons : 240 pcs

(c) Carton size : 525 mm × 360 mm × 225 mm

(d) Total mass of 1 carton filled with full modules : approximately 9500 g

Condition for storage

Environment

(1) Temperature : 0～40℃

(2) Humidity : 60%RH or less(at 40℃)

(3) Atmosphere : Harmful gas, such as acid or alkali which erodes electronic components and/or wires, must not be detected.

(4) Period : about 3 months

(5) Opening of the package : In order to prevent the LCD module from breakdown by electrostatic charges, please control the room humidity over 50%RH and open the package taking sufficient countermeasures against electrostatic charges, such as earth, etc

SHARP

CONFIDENTIAL

LCD-FPC detail (GND-pad) top view

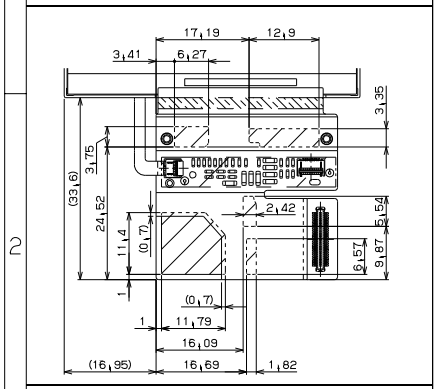

LCD-FPC detail (GND-pad) bottom view

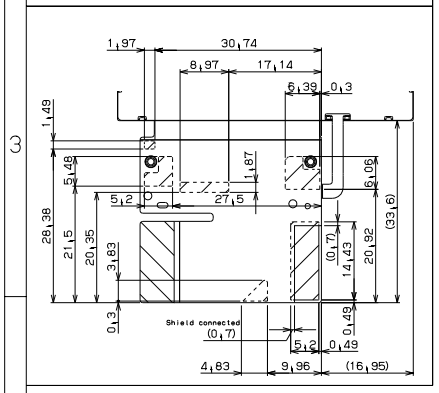

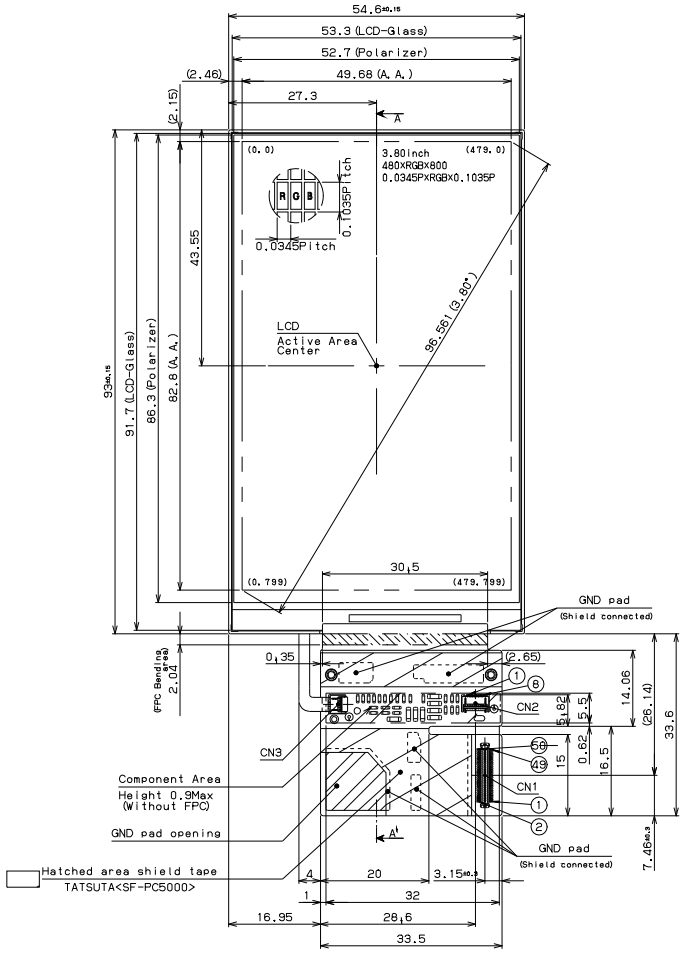

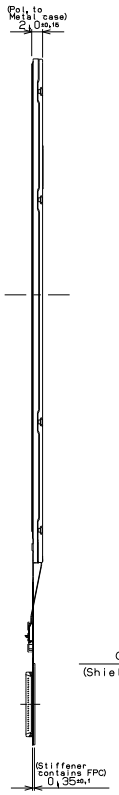

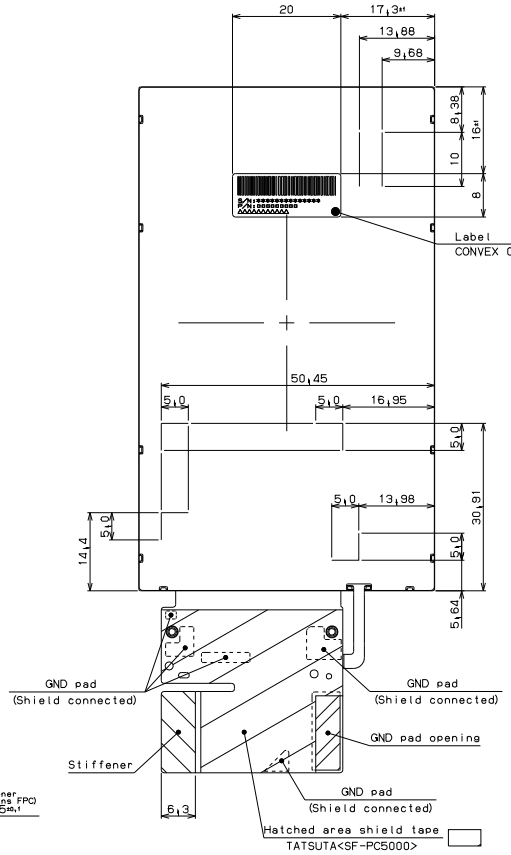

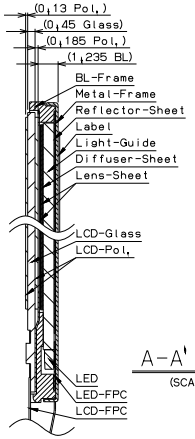

A-A' SECT
(SCALE 3/1)

For TP Connector

Pin No.	Pin Name
1	TP_Key_1
2	TP_X-
3	TP_Key_C
4	TP_X+
5	TP_Key_2
6	TP_Key_3
7	TP_Y-
8	TP_Y+

	Application	Maker	part No.
CN1	for I/F	Panasonic	AXT450124
CN2	for TP	DDK	FF18-8A-R11A
CN3	for LED	DDK	FF18-4A-R11A

Any foreign materials and contamination outside the Active area are to be treated as "NO-Count" at our inspections.
Guarantee of appearance=LCD Active Area.
General tolerance is ±0.5.
LCD-FPC bend larger than 0.6 in radius.
Please design carefully to hide the polarizer and other frame areas, which are outside of the guaranteed area.
As the light from backlight may leak from the gap at outside of active area, which are outside of active area, please pay attentions to such leakage when designing the set.
The tolerances of the module width do not include warp of the case.

TENTATIVE

The drawings above are tentative as the some parts are currently being under review, which may be changed in future.

5			
4			
3			
2			
1			
改訂日	改訂記事 REVISION		担当

設計 DESIGNER	製図 DRAFTER	検図 DSN CK	検図 DSN CK	承認 ENG APPD
登日		松本	庄司	槙井

ENGINEERING DEPT. I
MOBILE LIQUID CRYSTAL DISPLAY DIVISION I
MOBILE LIQUID CRYSTAL DISPLAY GROUP
SHARP CORPORATION

ORIGINAL MODEL	LS038Y7DX01
画面サイズ ACTIVE AREA SIZE	(3.80") 480×RGB×800
尺度 SCALE	1/1
日付 DATE	10/Mar/2008
単位 Unit	mm
名称 NAME	3.80" WVGA Outline dimensions
ユーザー USER	
原紙サイズ	A3
図番 DRAWING NO	LDM-03367A

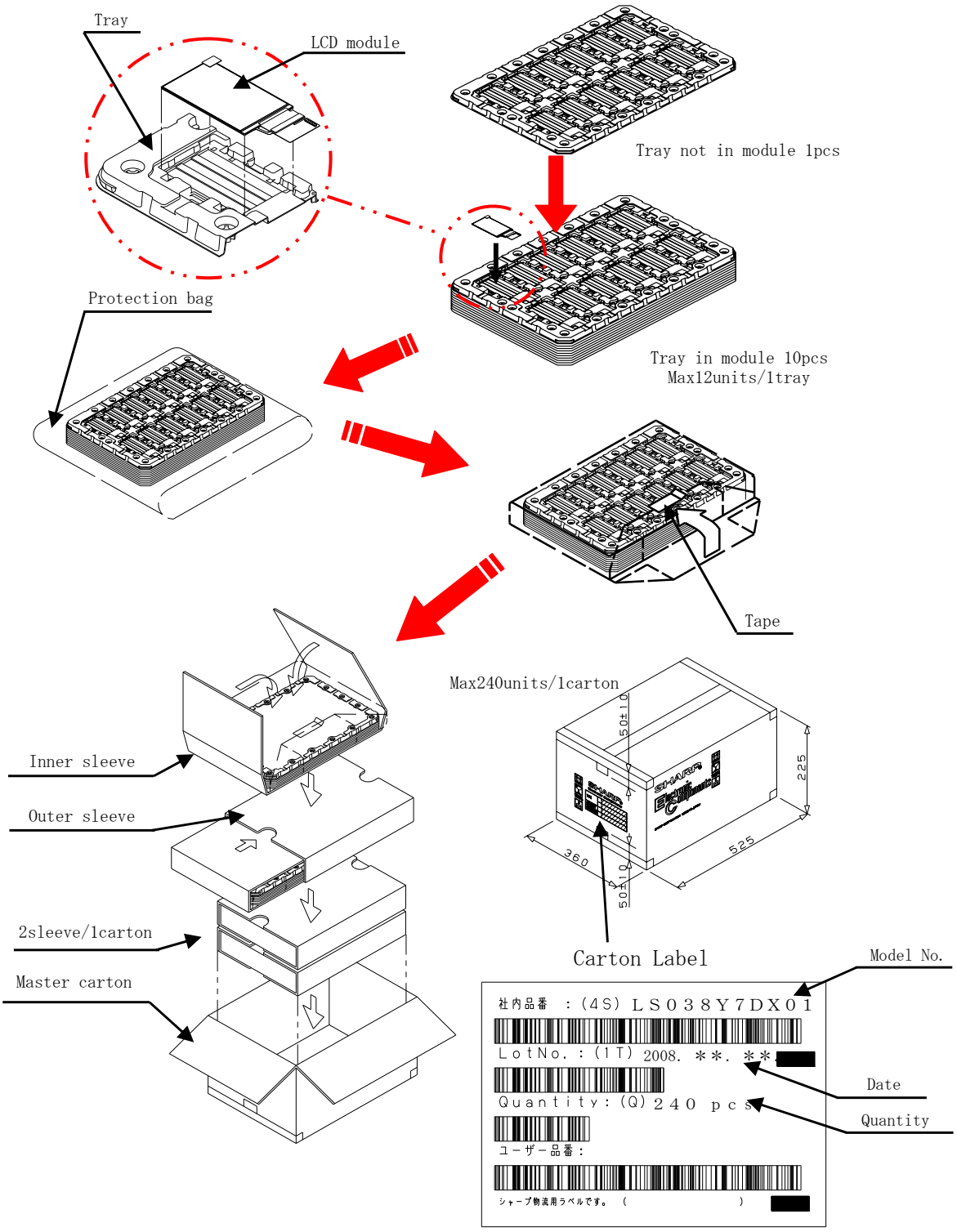

Fig.2 Packing form